Norberto "Beto" Salinas, Mayor
Norie Gonzalez Garza, Mayor Pro Tem
Jessica Ortega-Ochoa, Councilwoman

Ruben Plata, Councilman
Dr. Armando O'caña, Councilman
Martin Garza Jr., City Manager

CITY OF MISSION

"Home of the Grapefruit"

May 11, 2017

RE: **Addendum No. 1/Removal & Replacement of Tile Floors at City Hall**
Request for Bid No.: 17-189-05-15

Dear Prospective Bidder:

The following is to be corrected/added/changed/clarified:

a. This addendum is being provided to all bidders. Changes are marked with a vertical line on the right hand side.

b. **QUESTION #1** – Will Rubber /Cove base be removed and replaced?
Answer: Yes, please see revised Specifications/Scope of Work.

c. **QUESTION #2** – Do you want to add stock?
Answer: Yes, one extra box of material.

d. **QUESTION #3** – What are the working hours for this project?
Answer: Due to noise and dust, weekends 7:00 AM- 6:00 PM and weekdays 5:00 PM- 10:00 PM, are preferable. Depending on the area being worked on, normal weekday work hours will be considered,

e. **QUESTION #4** – Will there be moisture testing done on the slab?
Answer: No. Installation fully warranted as per manufactures recommendation.

f. **QUESTION #5** – Where will the dumpster site be located at City Hall?
Answer: North side of the building. Inside the gated area.

g. **QUESTION #6** – Will there be a set of plans to scale?
Answer: See attached scaled printable 24"X36" PDF plans.

h. **QUESTION #7** – Will the number of days be changed?
Answer: No.

i. **QUESTION #8** – Who will be doing the furniture moving as the project is in process?
Answer: Contractor is responsible for the removal and replacement of furniture to its original placement. City of Mission Facilities Department is responsible for removal and replacement of paper files, safe (found in Utilities Department), computers and printers to its original placement.

j. **QUESTION #9** – Will you request an adhesive with moisture system where water damage has been found?
Answer: Optional. Installation fully warranted as per manufactures recommendation.

k. **QUESTION #10** – Can floors be left bare after demolition of existing materials?
Answer: No. Consideration will be given for side rooms that are not regularly occupied.

1201 E. 8th St. • Mission, Texas 78572 • www.missiontexas.us

l. The bid due date has changed. **The date for receipt of bid is Thursday, May 18, 2017 at 2:00 P.M. CST.**

NOTE: This form must be completed and submitted with your bid response. ***WARNING: Failure of an Offeror to acknowledge receipt of this Addendum, as described herein, may result in REJECTION OF THE OFFER.***

We apologize for any inconvenience this may have caused. Authorized signature is needed. Everything else shall remain the same. If you have any questions, please contact me at (956) 580-8667.

Sincerely,

Eduardo Belmarez,
Purchasing Director

_____ Acknowledge receipt of Addendum No. 1
Authorized Signature

_____ _____
Printed Name Company Name

City Of Mission
Specifications
Bid Name/No.: "Removal & Replacement of Tile Floors at City Hall"/ 17-189-05-15

I. **Scope of Work:** The City of Mission is accepting bids for the Removal and Replacement of Tile Floors at City Hall as per attachment.

Goods/Services Information: (Provide detailed project description and include contractors/vendors you wish for us to contact as an attachment).
Removal and replacement of existing VTC tile in Mission City Hall as per Attachment.
MATERIALS:
Colors and Patterns: As selected by owner from manufacturer's standares.
Construction:
Vinyl Composition Tile (VCT): FS SS T 312, Type IV; 12" x 12" x 1/8"
Product Line:
Imperial Texture Multicolor
52514 Jubilee White
International Product Specification:
ASTM F1066 – Class 2
Through Pattern
ISO 10595 Type II
Composition 1 asbestos-free
Overall Thickness Wear Layer Thickness:
1/8" (3.2 mm)
Tile Size:
12" x 12" (305 mm x 305 mm)
Factory Finish:
"Fast Start"
Maintenance Options: *
* Polish (See Below)
Rubber Wall Base:
Johnson Rubber Co. Inc. Flooring Accessories Div.
R.C. Musson Rubber Co. Inc.
Roppe Rubbercorp
Accessories: (to be bid separately)
Wall Base (WLBS): provide rubber base complying with FS SS W 40, type I
Height: 4"
Thickness: 1/8" gauge
Style: Standard top set cove
Finish: Matte – to match existing base board
Transition Strip:
Provide 1" wide transition strips between all differing floor conditions.
Provide 1" transition strip at all door openings.
Adhesive (Cements): waterproof, stabilized type as recommended by flooring manufacturer to suit material and substrate conditions.
Concrete Slab Primer: Non-staining type as recommended by flooring manufacturer
Leveling Compound: Latex type as recommended by flooring manufacturer.
Floor Wax: Five (5) coats required
National Chemical Laboratories, Inc.:
ONE COAT 25 Super High gloss Floor Finish
0510 – Commercial and Industrial use only floor finish

Preparation:

Broom clean or vacuum surfaces to be covered, and inspect sub-floor. Demo of existing floor. Please note that there are a couple of rooms that will have only a few tiles pieces replaced and will be discussed during Pre-Bid. Expansion joint in rear main hall way will be filled with latex type leveling compound. Any irregularities are to be ground and leveled accordingly.
Use leveling compound as recommended by flooring manufacturer for filling small cracks and depressions in sub-floors.

II. **Specifications:** It is the intention of these specifications to describe the various materials needed . Please read specifications thoroughly and be sure that the Tile Flooring offered complies with all requirements.

III. Please read your specifications thoroughly and be sure that the Tile Flooring offered comply(ies) with all requirements. Any variations from the specifications must be clearly indicated on item specification sheet and covered by letter attached to and made a part of your bid. If no exceptions are noted and you are the successful bidder, it will be required that the Tile Flooring be furnished as specified.

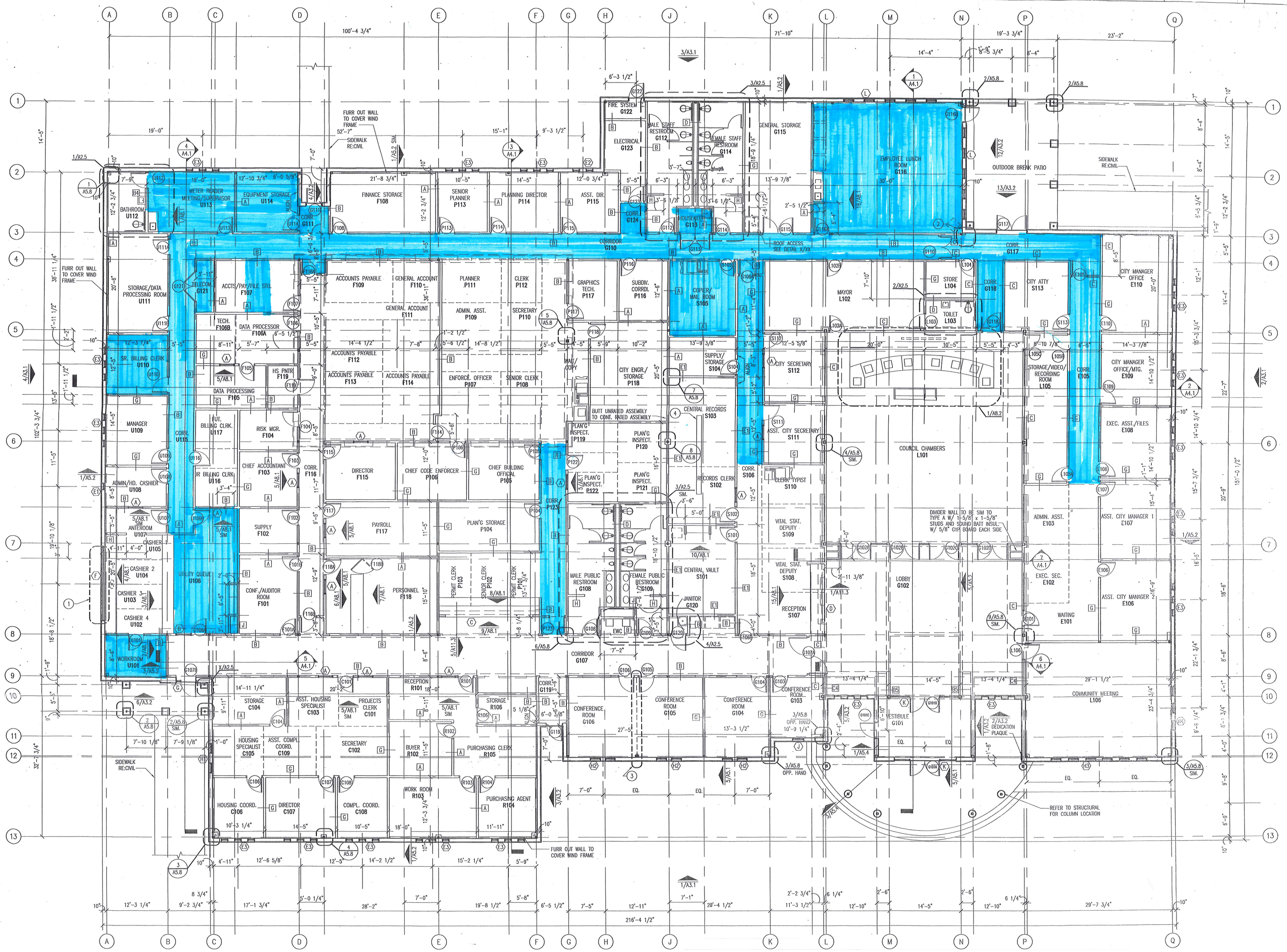

1 FLOOR PLAN
SCALE: 1/8" = 1' - 0"

GENERAL NOTES

KEYED NOTES

1. BULLET RESISTANT WINDOW AND FRAME - COORDINATE INSTALLATION WITH MANUFACTURER'S REQUIREMENTS - REINFORCE SURROUNDING WALL AS REQUIRED TO PROVIDE NECESSARY SUPPORT AND BRACING.
2. OVERLAP INTERIOR RATED WALL 8" OVER EXTERIOR WALL. RETURN 2 LAYERS OF 5/8" DRYWALL TO EXTERIOR WALL.
3. MOVABLE PARTITION. COORDINATE THE REINFORCEMENT OF STRUCTURE ABOVE AND WALL SUPPORT AND BRACING WITH PARTITION MANUFACTURER REQUIREMENTS.
4. RECESS FLOOR AREA 1-1/2" FOR OWNER FILING SYSTEM. CONFIRM SIZE AND LOCATION WITH OWNER PRIOR TO INSTALLATION OF CONCRETE FLOOR.

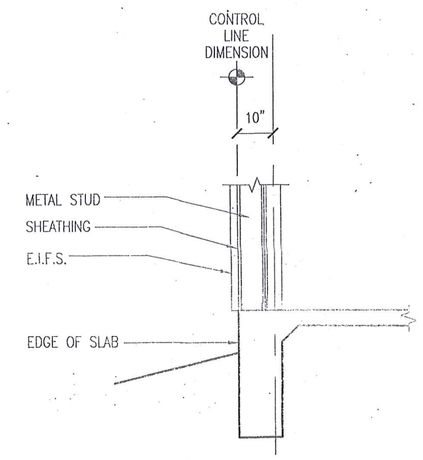

TAG International, L.L.P.
ARCHITECTS • ENGINEERS
McAllen, Texas, USA · Austin, Texas, USA · Queretaro, Queretaro, Mexico

PROJECT NAME: MISSION CITY HALL FACILITY

PROJECT LOCATION: East Eighth Street, Mission, Texas

SEAL: REGISTERED ARCHITECT, STATE OF TEXAS, 10-3-01

SHEET TITLE: FLOOR PLAN

DRAWN	PROJECT NO.
CC	01027
CHECKED	SHEET NO.
RP	A2.1
DATE	
10.01.01	

PROJECT NAME: MISSION CITY HALL FACILITY

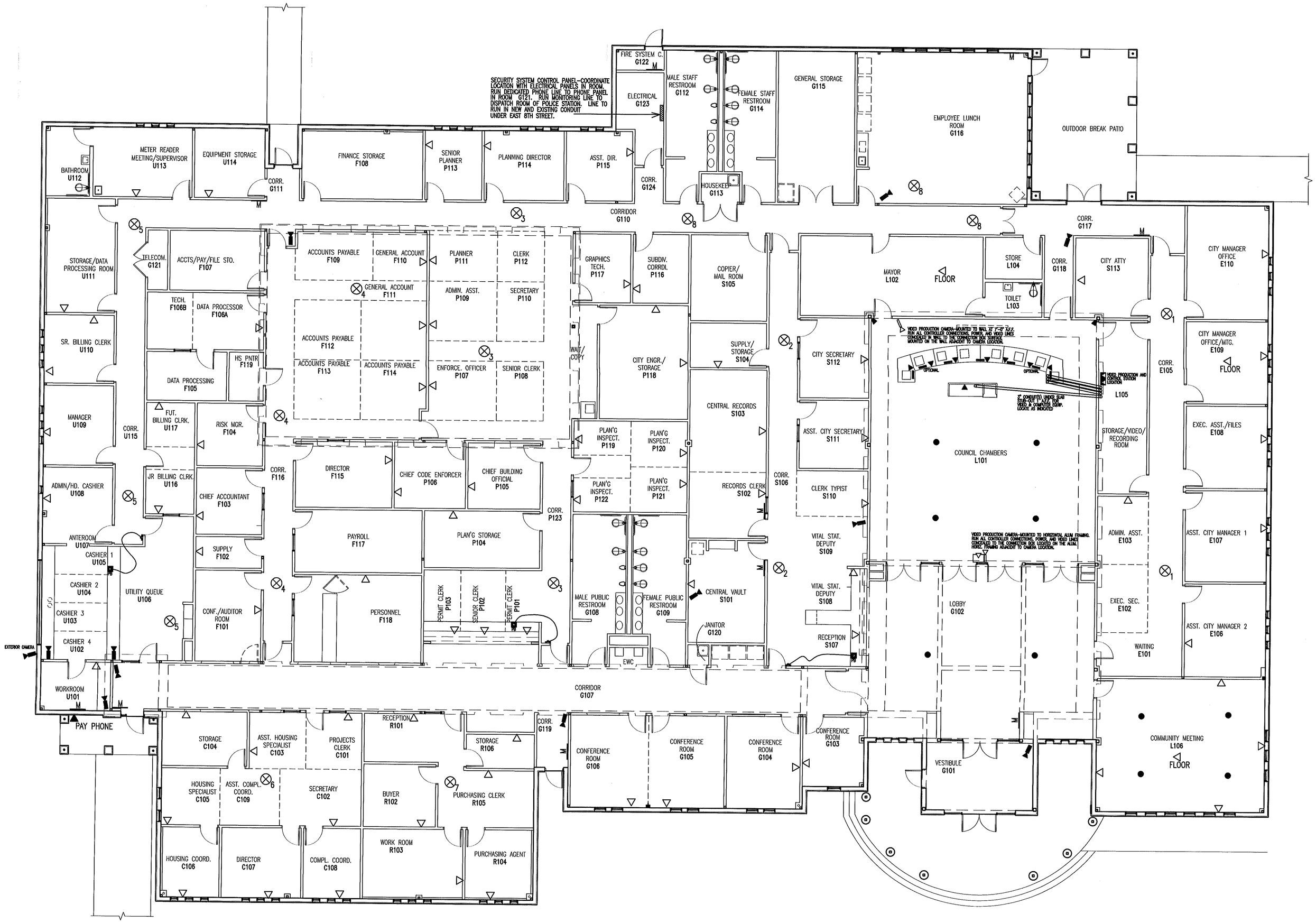

1 AUDIO/VISUAL FLOOR PLAN
SCALE: 1/8" = 1' - 0"

GENERAL NOTES

1.) TELEPHONE OUTLETS LOCATED HERE; AND LOCATED AND SPECIFIED IN THE ELECTRICAL DRAWINGS (PAGES E0.0, E1.1, E2.1,E2.2,E3.1, 4.1,E5.1,E6.1) AND SPECIFICATIONS (DIVISION 16) SHALL BE DUAL PORT DEVICES (COMBINATION PHONE AND DATA OUTLETS)

2.) EACH TELEPHONE AND DATA OUTLET INDICATED HERE AND IN NOTE 1. ABOVE SHALL HAVE SEPERATE CABLING. PHONE CABLES TO RUN TO TELEPHONE EQUIPMENT ROOM M121. DATA CABLE TO RUN TO DATA PROCESSING ROOM F105. ELECTRICAL BOXES AND CONDUIT FOR THESE BOXES ARE TO BE INSTALLED BY OTHERS.

3.) INSTALL ALL CONDUIT AND CABLING ACCORDING TO THE GENERAL CONDITIONS AND REQUIREMENTS OF THE PLANS AND SPECIFICATIONS DATED 10/01/01.

4.) ALL PHONE AND DATA CABLING IS TO BE INSTALLED AT THIS TIME. PREPARE EACH CABLE PLUG–IN READY WITH UNIVERSAL CONNECTORS OR WIRED TO TERMINAL CONNECTORS. DATA CABLE TO BE CAT–5 TYPE WITH APPROPRIATE CONNECTIONS. ELECTRICAL BOXES AND CONDUIT FOR THESE BOXES ARE TO BE INSTALLED BY OTHERS.

5.) ALL EXTERIOR GLASS OPENINGS SHALL HAVE GLASS BREAK DETECTORS INSTALLED.

KEYED NOTES

- SUSPENDED SPEAKER
- WALL MOUNT SPEAKER
- DATA/VIDEO PROJECTOR–LOCATE ON BRACKET ON HORIZONTAL ALUM. FRAMING. MOUNTING HEIGHT TO COORDINATE W/ CENTER OF PROJ. SCREEN. RUN ALL CONTROLLER CONNECTIONS, POWER, AND VIDEO LINES CONCEALED TO CONNECTION BOX LOCATED ON THE ALUM. HORIZ. FRAMING ADJACENT TO PROJECTOR LOCATION.
- VIDEO PRODUCTION CAMERA–LOCATE CAMERA AT 7'–0" AFF ON BRACKET MOUNTED TO HORIZONTAL ALUM FRAMING.
- DUPLEX SURFACE MOUNTED PHONE AND COMPUTER NETWORK CONNECTION
- PROJECTION MONITORING SCREEN–MOUNT ON COUNTER
- ELECTRIC REMOTE DOOR LATCH
- PB DOOR OPENER PUSH BUTTON UNDER COUNTER
- SECURITY CAMERA LOCATION AT CEILING
- M MOTION DETECTOR
- ⊗1 PA SPEAKER IN CEILING–NUMBER INDICATES ZONE

	ADDENDUM	02.14.02

TAG International, L.L.P.
ARCHITECTS · ENGINEERS
McAllen, Texas, USA Austin, Texas, USA Queretaro, Queretaro, Mexico

PROJECT NAME: MISSION CITY HALL FACILITY

PROJECT LOCATION: East Eighth Street, Mission, Texas

SEAL: REGISTERED ARCHITECT, RON PEARL, 7510, STATE OF TEXAS
Exp 7-31-02
2-14-2002

SHEET TITLE: AUDIO AND VISUAL FLOOR PLAN

DRAWN	PROJECT NO.
CC/RP	01027
CHECKED	SHEET NO.
RP	A17
DATE	
12.03.01	

PROJECT NAME: MISSION CITY HALL FACILITY